“Power Cut” Vs “Power Consumption cut”

A discussion about ‘Smart Energy meters’ and ‘smart circuit breakers’

-RadhaKrishna

Radhakrishna.arvapally@gmail.com

+91-99010 79268

Ver 1.2

2010-Oct-28

RadhaKrishna.arvapally@gmail.com

Power Generation by power plants

Power Generation is almost constant (an exception to this are renewable Green Power generation like wind/tidal/wave/solar/osmotic/biomass/ geothermal power generation, whose output varies with time. Hydroelectric/gas/Coal/Petroleum/bio-fuel/Bloom/Nuclear power stations output will be constant unless modified intentionally). .

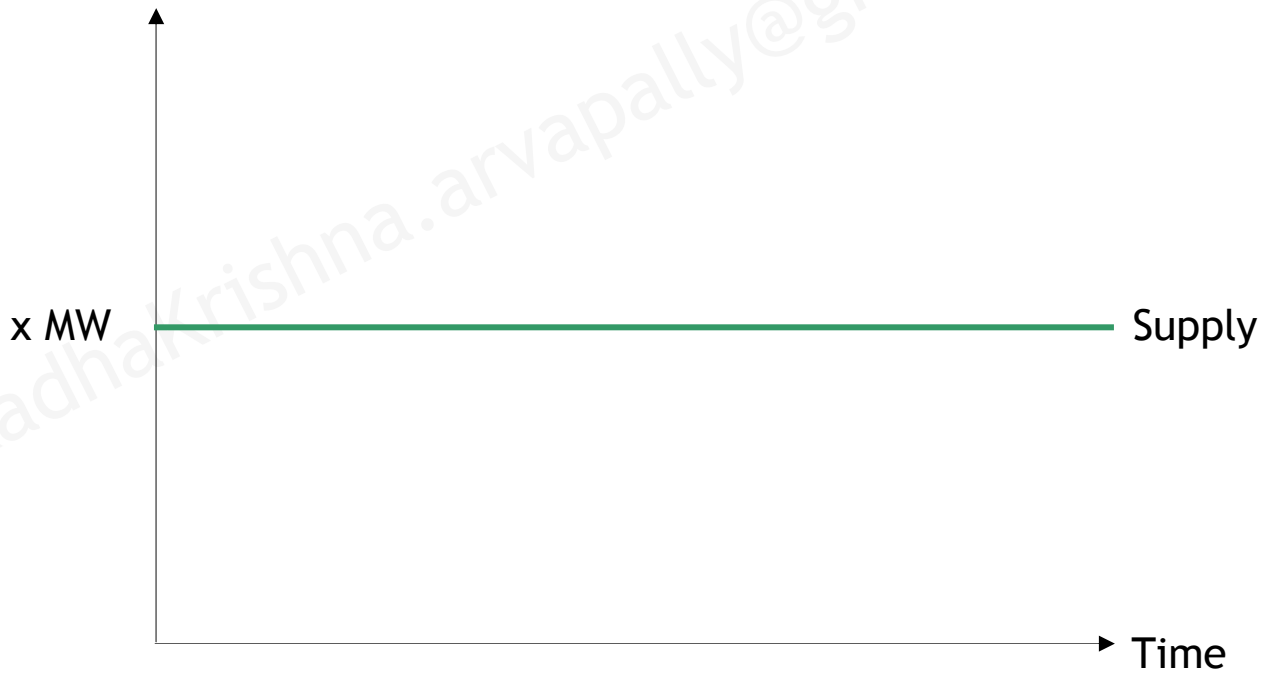

RadhaKrishna.arvapally@gmail.com

Power consumption by consumers

Power consumption is very fluctuating

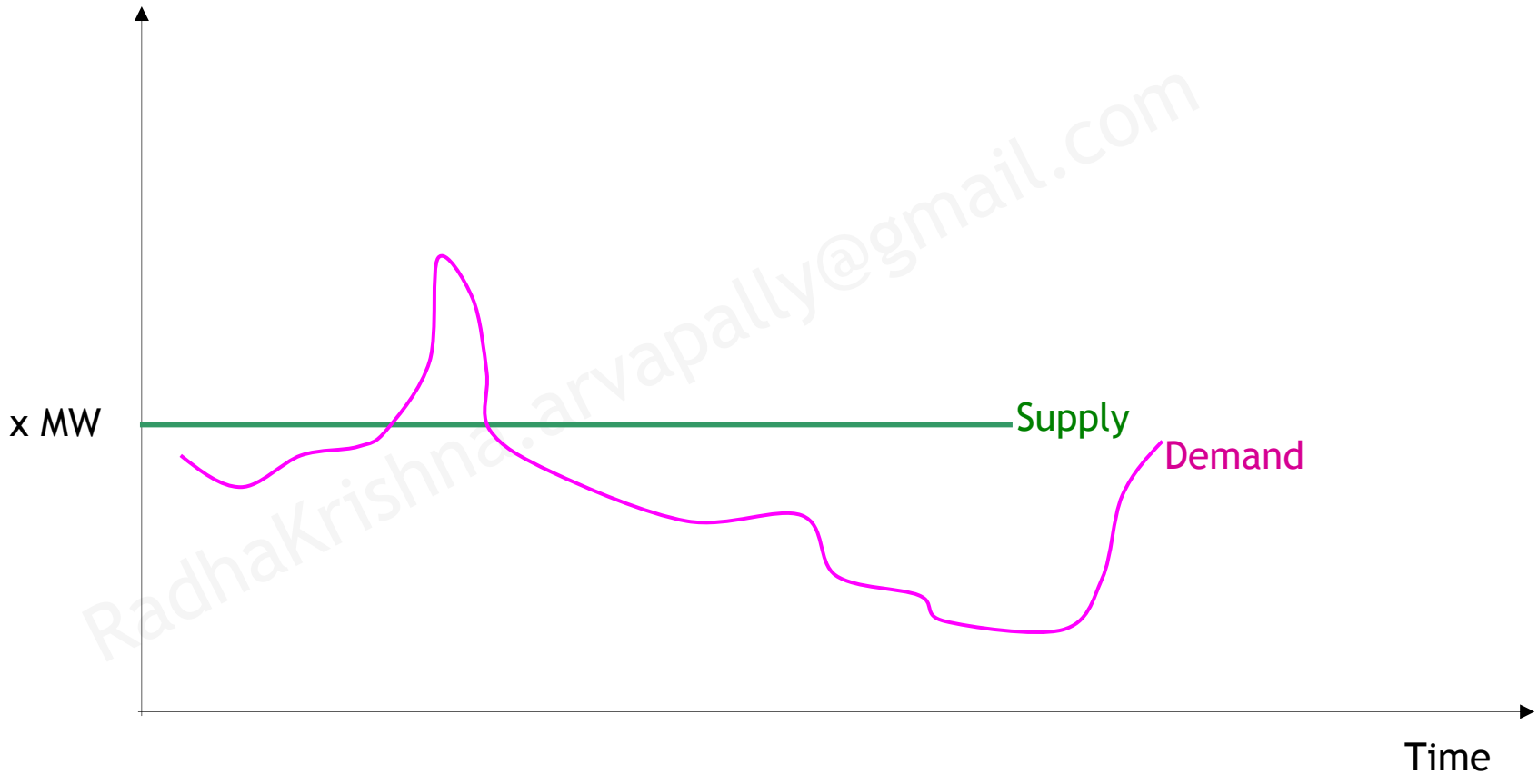

RadhaKrishna.arvapally@gmail.com

Problem faced by Distribution companies

Problem area is shown below

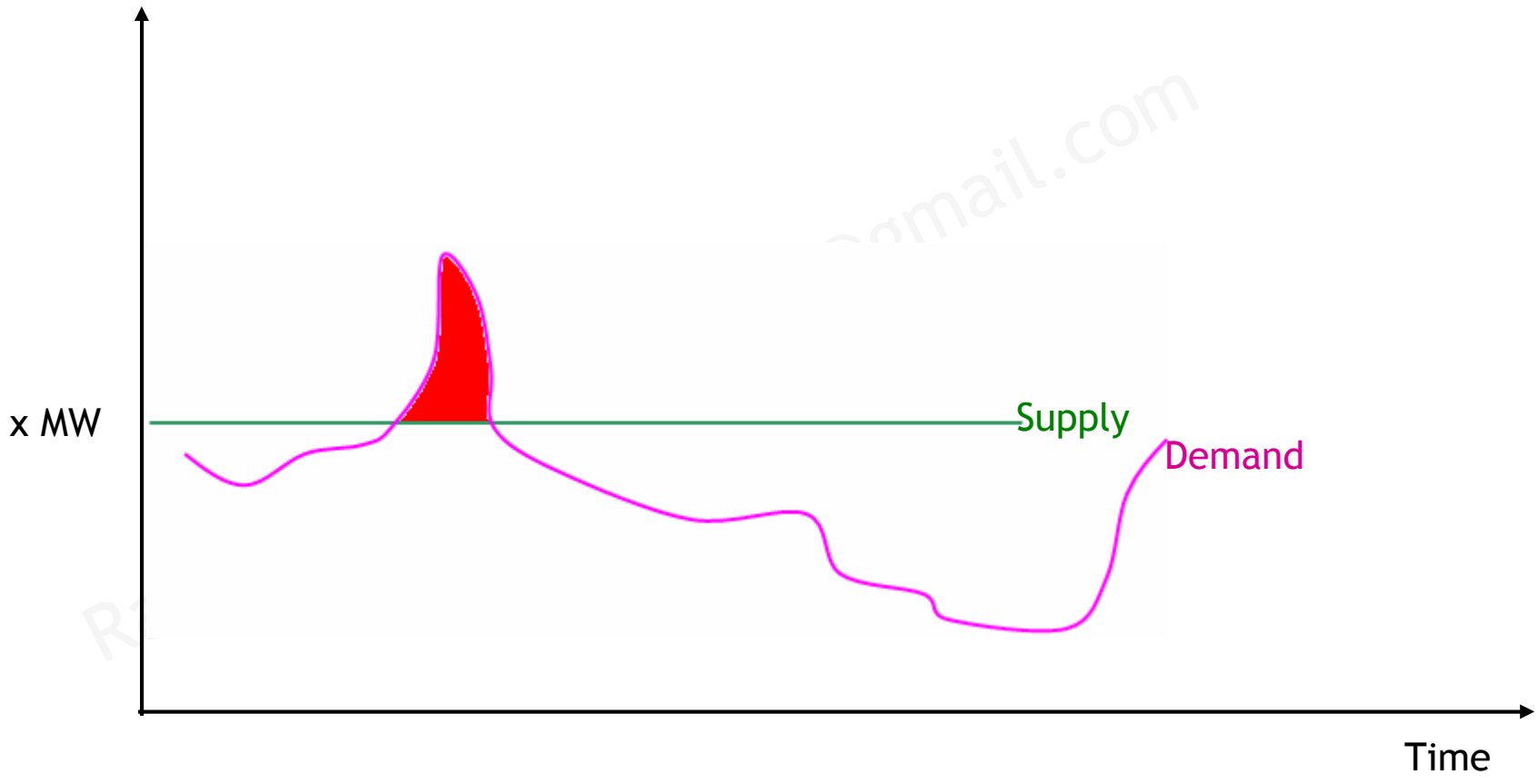

Solutions

What does the distribution companies do during this period?

1) purchase from other states

- What if the other state is also unable to supply during that period as their peak hours also matching?

2) Power CUT to some regions

- This has a serious problem of some areas using all lights/fans/AC/heater/amusement and other regions living in dark without power for basic (mobile charging) and critical equipment like operation theatres in hospitals.

radhakrishna.arvapally@gmail.com

Power Cut

How Power cut works?

Divide AP in to power zones and assign priorities.

Hospitals area, Industrial area, schools area, domestic area will be given different priorities.

Cut the power to non priority power zones during peak hours.

How Power Grid looks like

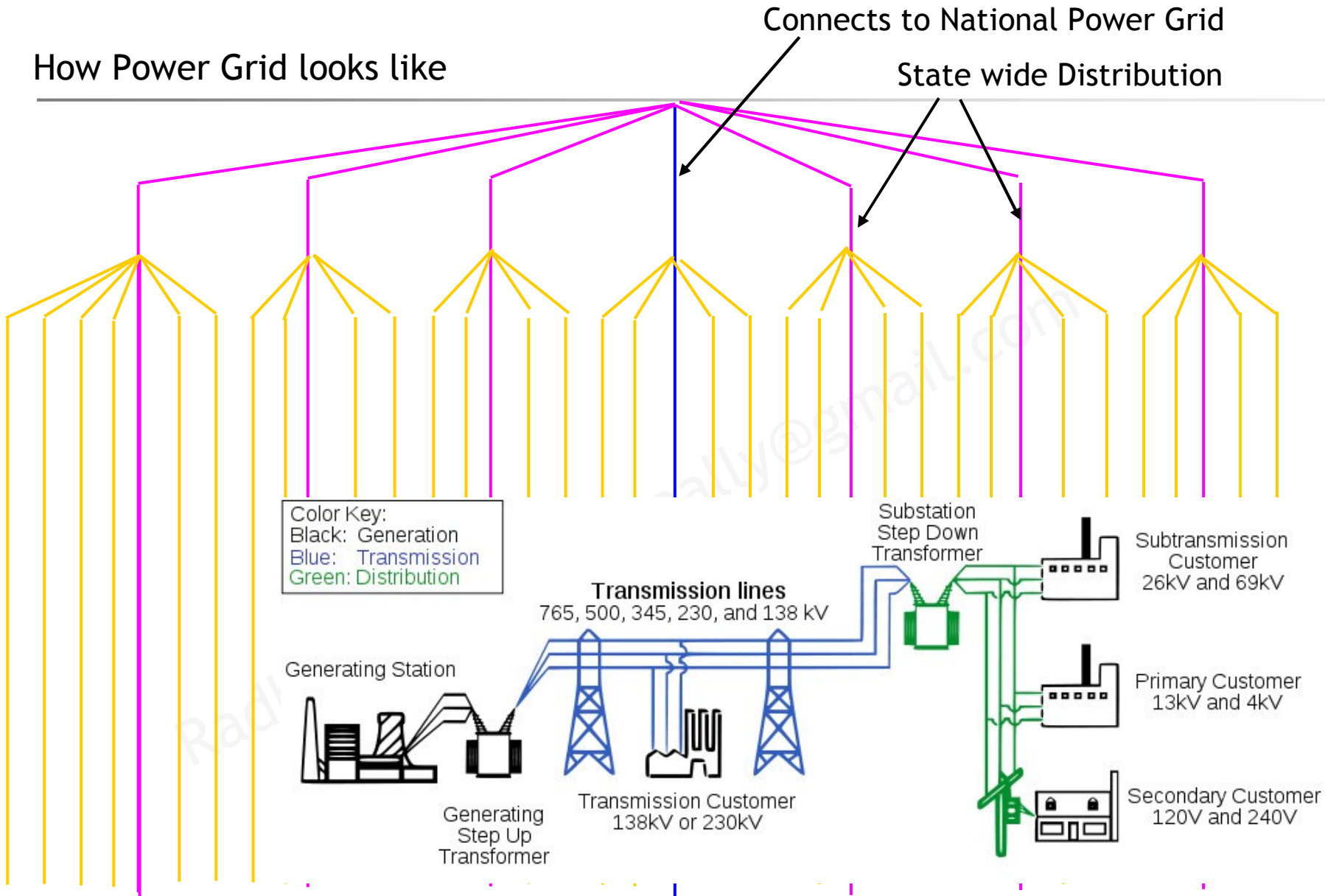

http://en.wikipedia.org/wiki/Electric_power_transmission

When Power Cut to a power-cut zone…

Some zones becomes dark

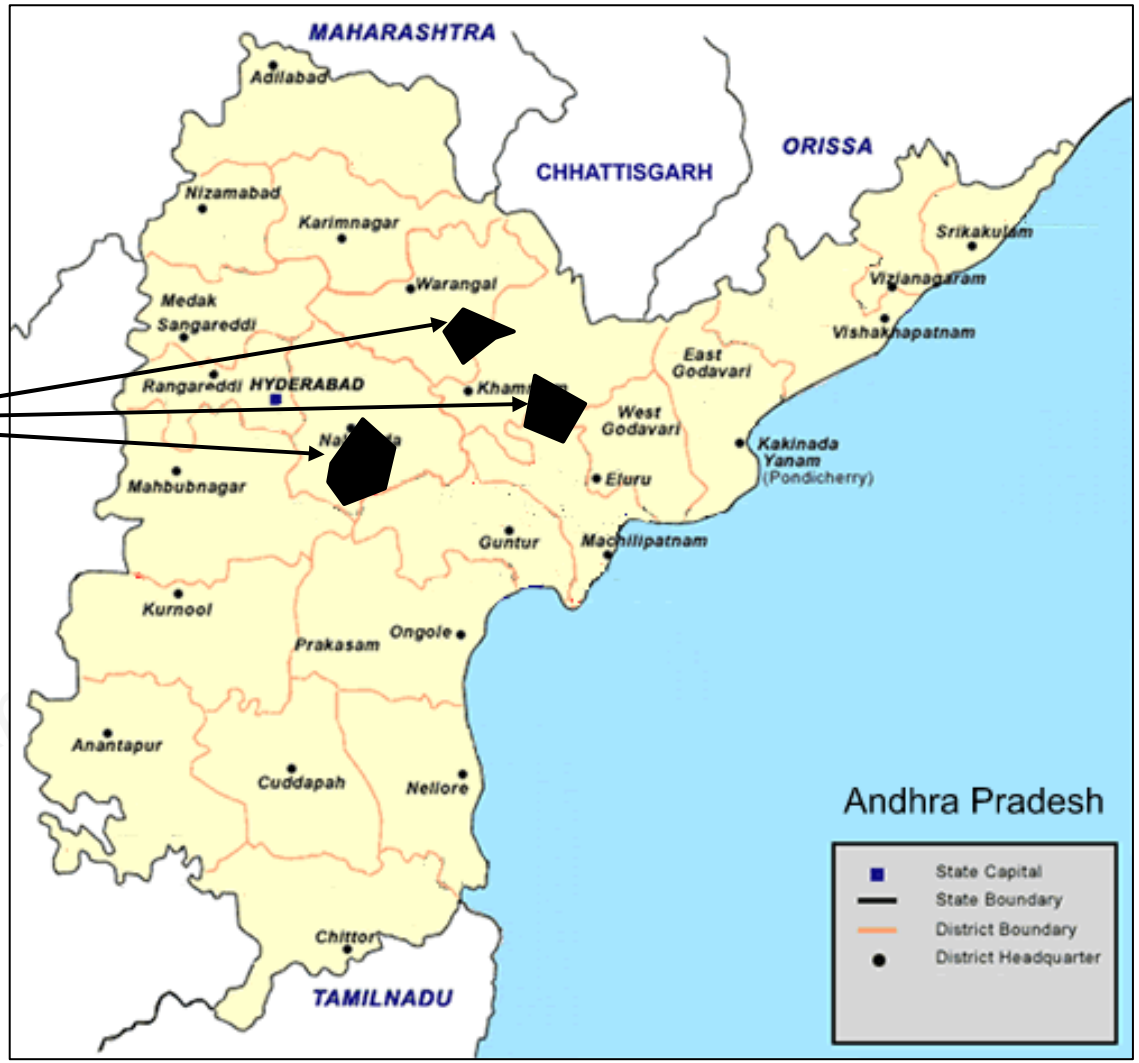

Radhakrishna.arvapally@gmail.com

What the power cut leads to

When the power is cut, all high priority works (like operation theatre, s/w companies, lifts in 100storied buildings) need alternatives.

This leads to market for UPS, Invertors, Generators

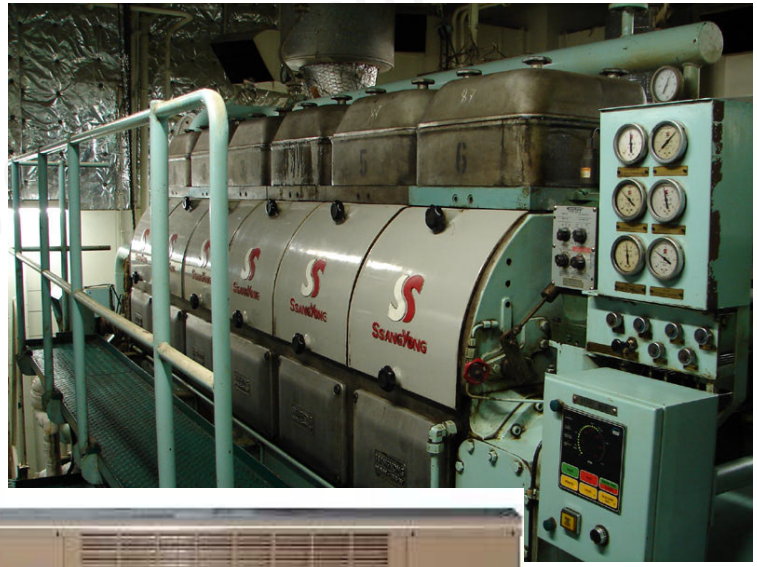

Impacts

These solutions are very expensive.

One time costs:

- An Inverter for a household costs 10K Rs/-
- A backup generator for lift in a small apartment costs around 250K
- A diesel generator for a small shop costs 150K
- A diesel generator for IT organization (of 5k staff) costs 20M

Running Cost:

- More than 15 Rs/KWH

Radhakrishna.arvapally@gmail.com

Alternatives???

During power-cut: households, shops, IT organizations, hospitals don’t run all electrical equipment on Inverters/generators. They only run priority items due to high running cost.

If every one in all regions uses only priority items and turn-OFF non-priority items during peak hours (problematic hours), we don’t need to cut power to some regions.

But how do we make every one turn off their non priority items?

How do we make a house wife use washing machine in non peak hours?

How do we make people recharge their electric cars during non-peak hours?

How do we make corporates turn off some lights during peak hours?

All of them are being followed when they are running backup generators. Why don’t they follow same when power is supplied without cut?

Radhakrishna.arvapally@gmail.com

Alternatives????

Reason that drives people is money. When the regular power is 3 Rs/Unit, we use more. When the backup generator costs 15 Rs/Unit, we tend to conserve.

Why can’t we make people pay more during peak hours? So that people will become conservative?

RadhaKrishna.arvapally@gmail.com

Technology limitations

Current mechanical electric meters does not bill depending on time of use.

We need new technology for doing this.

We need smart electric meter to do this for us. This smart meter should be able to record the power consumption during each point of time.

So that we can bill as per the usage time too.

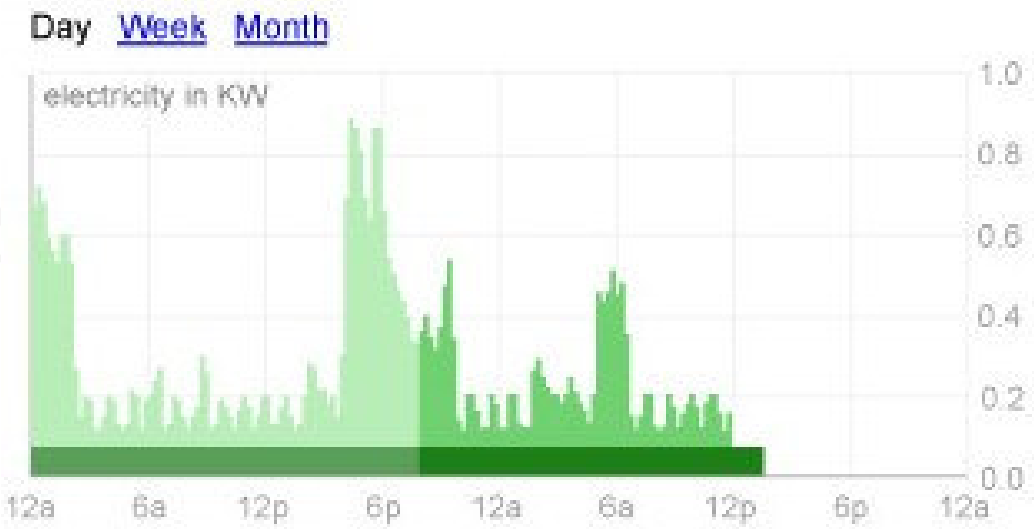

Result

Power consumption now will be **scaled down** depending on price at peak hours

I will scale the graph with x (scaling factor x is proportional to price)

RadhaKrishna.arvapally@gmail.com

Time

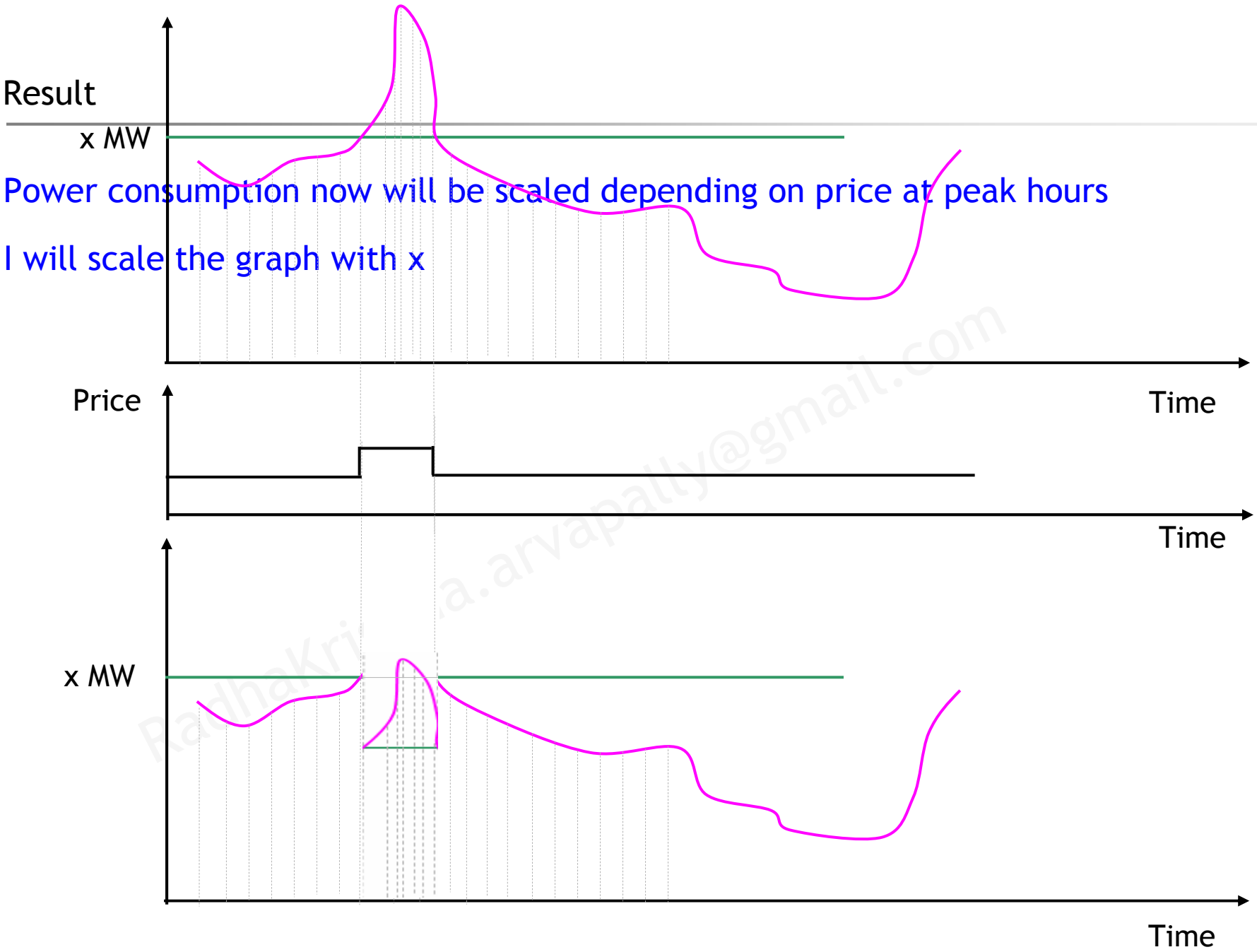

Radhakrishna.arvapally@gmail.com

Repeated Correction

Still have Demand-Supply Gap?

Let me change the price again to further scale down the consumption …

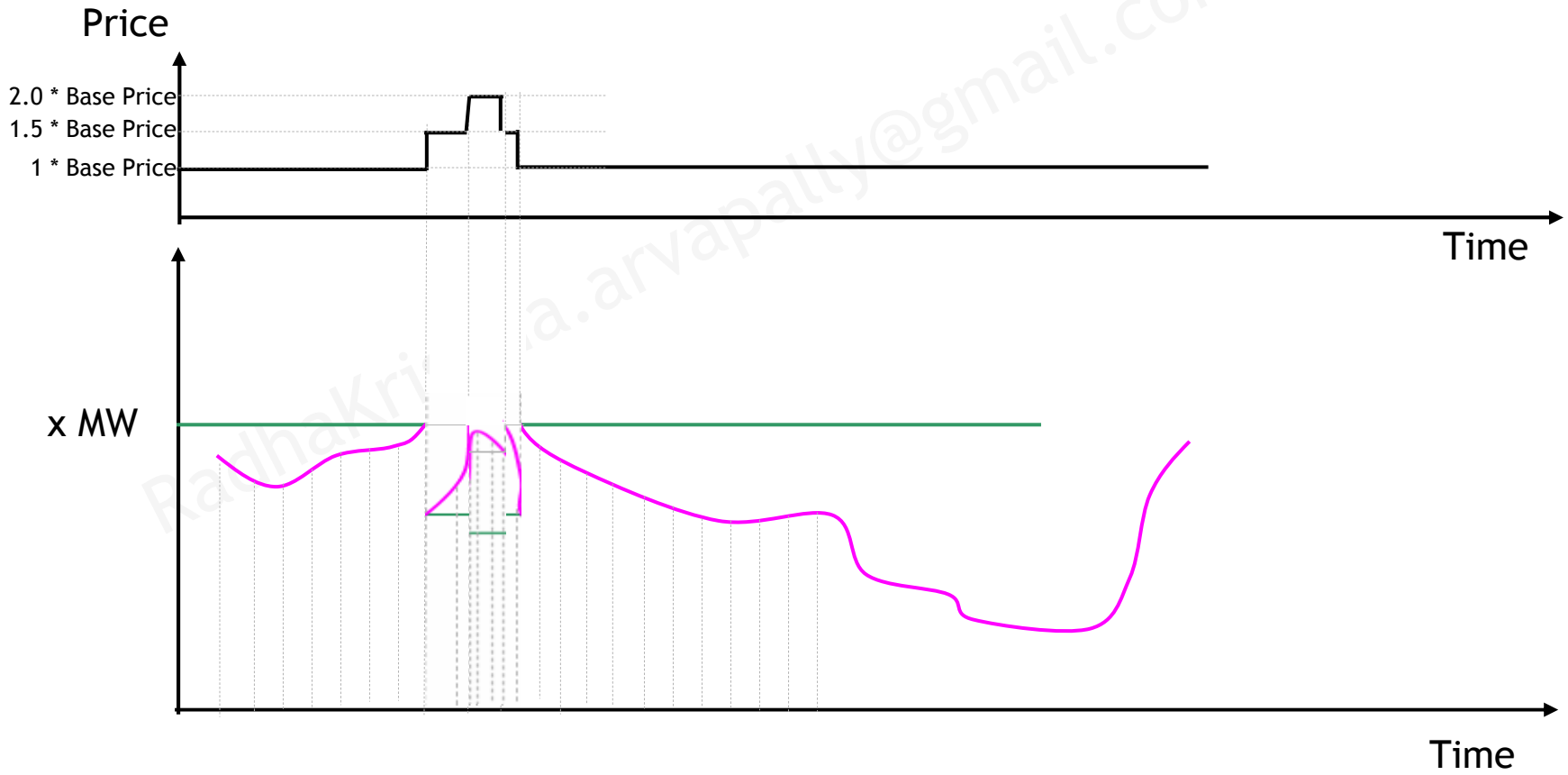

RadhaKrishna.arvapally@gmail.com

Technology

How do we achieve this?

We need a smart energy meter (will be called SEM from now onwards in this document) to do this. This meter should be able to record power consumption against time (instead of recording cumulative energy consumption).

This energy meter need to be communicated from the central station, who does this dynamic stats analysis and price determination.

This can be easily achieved if we use a GSM/CDMA modem in each meter. Central station can send control (either in control channel or SMS) to smart meter and get ack back for confirmation.

RadhaKrishna.arvapally@gmail.com

Technology

Do we have such smart meters?

Yes.

ICSA does have a smart energy meter which can communicate to central station, but not sure if it can record energy consumption against time.

http://www.icsa-india.com/Solutions/sem.html

Google power meter can record energy consumption against time.

http://www.google.com/powermeter/about/about.html

But not sure if it can communicate to central station.

RadhaKrishna.arvapally@gmail.com

Advantages?

We don’t need to buy power from other states.

No “Power Cut”… It is only “power consumption cut”.

Disadvantages?

Won’t it be costly to use such meter?

Yes. They are costly compared to regular mechanical meter. But a house hold will prefer to buy this instead of buying an Inverter. So it is inexpensive compared to an inverter.

An apartment prefers this instead of Lift backup generator. It is cheaper compared to back up generator for lift.

A corporate company will buy this for 4K to save his 20M diesel generator. ☺

Radhakrishna.arvapally@gmail.com

Death of old products

This solution leads to death of many products now.

Inverter fan (Fan with built in inverter)
http://www.clickindia.com/detail.php?id=4785198

Emergency Lights

Inverter LED Light (LED bulb with built in 4 hours backup)

UPS

Diesel generators

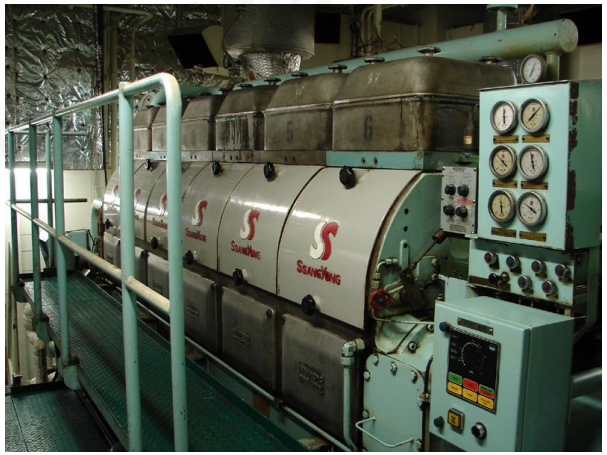

Implementation practical problems

This will be good to install these meters in every house, say in new power distribution installations to a village.

But what about the existing installations? What if every one is not ready for replacement, which may cost 4K to replace conventional meter?

So can’t we work out this?

Nop. We can still work out this.

RadhaKrishna.arvapally@gmail.com

Backward compatibility & Migration feasibility

Let me take a power-cut zone. This may have max of 10 distribution transformers? (correct me if I am wrong)…

Let me make a new type of circuit breaker, let us call it as Smart Circuit Breaker (let use SCB to represent this…).

This circuit breaker will have a GSM modem as a smart meter does have.

This circuit breaker cuts off the power when the central station instruction of billing is more than 1.0 times of base price.

Two variants of this circuit breaker: one is household capacity. Another distribution transformer capacity.

RadhaKrishna.arvapally@gmail.com

Backward solution & Migration feasibility

Let me first place these smart circuit breakers with each distribution transformer of a power-cut zone.

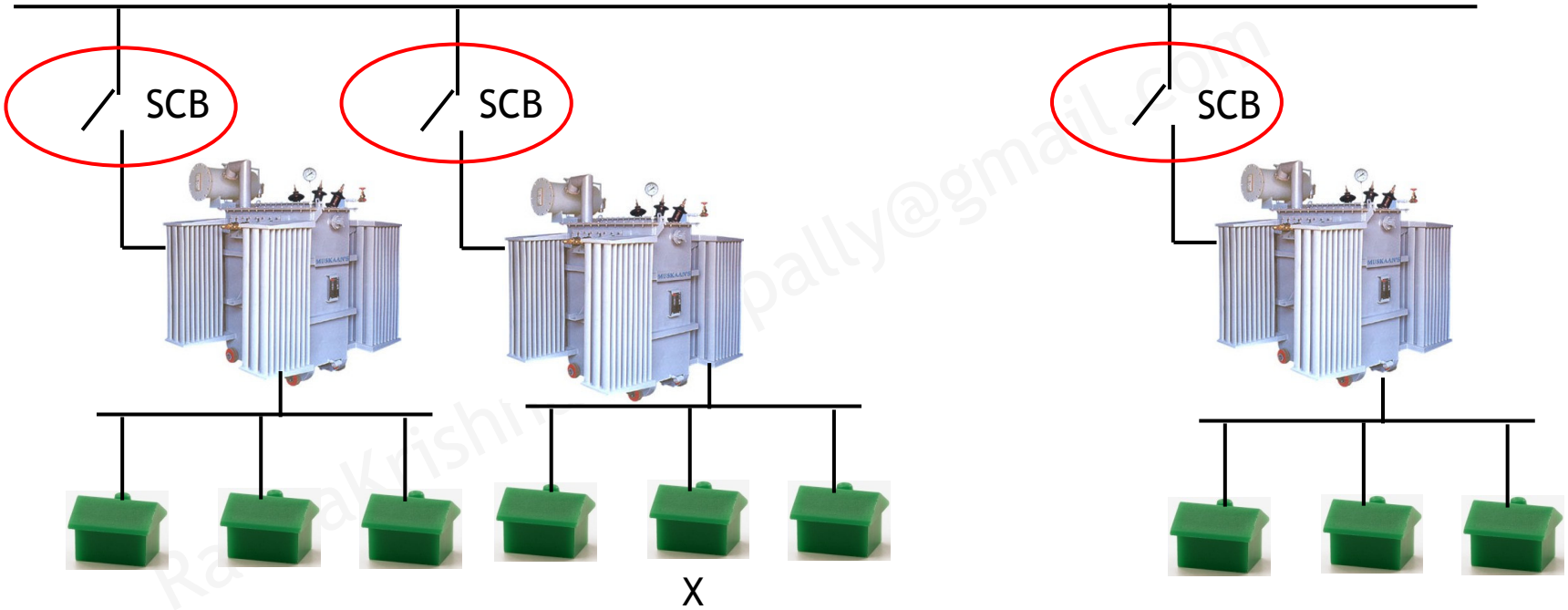

If an individual x requested for smart meter for “no power cut”.

Backward solution & Migration feasibility

Now I will remove main circuit breaker to that distribution transformer, and place small circuit breaker to other houses in that distribution transformer.

So in that power cut zone, there will be houses with power cut, and will be houses without power cut.

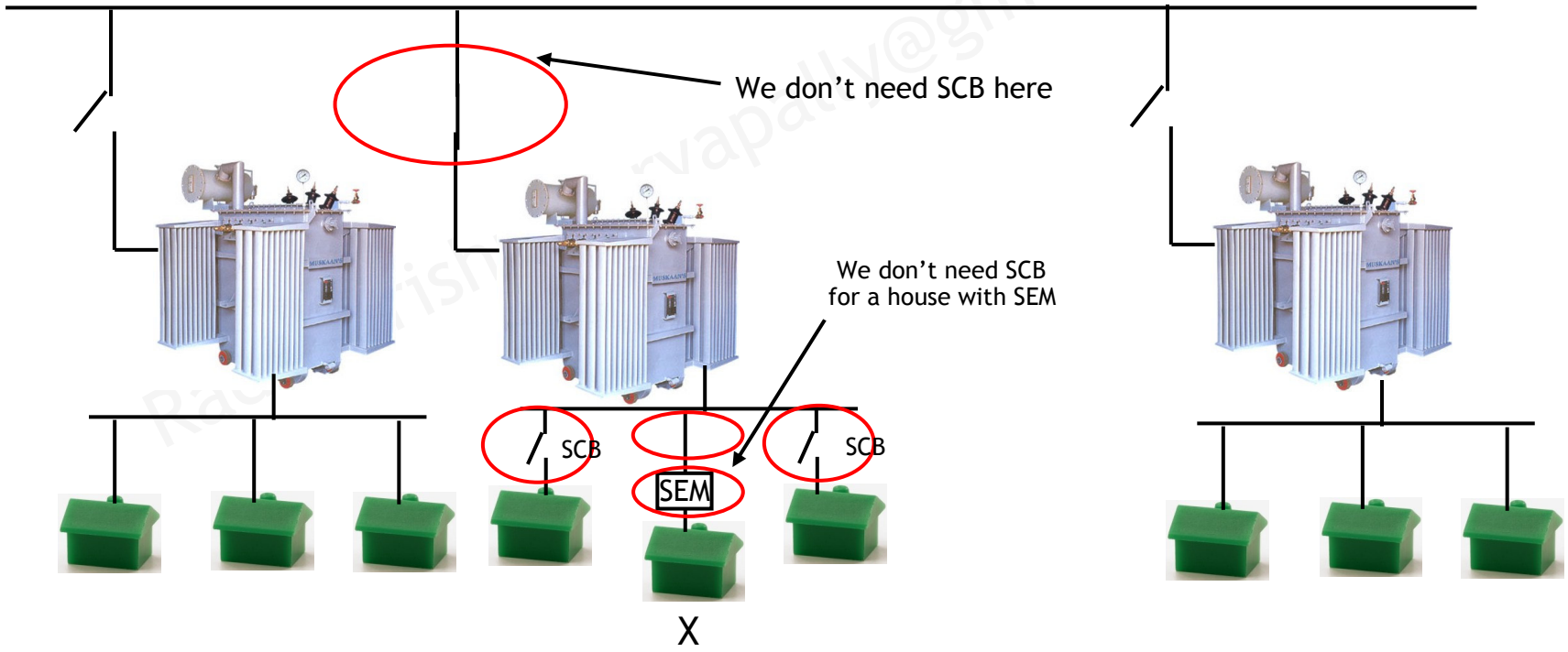

Optimization

Till now we discussed about transformer circuit breaker and house circuit breaker.

How to make this solution little less cost?

This is by using Pole circuit breaker. If 10 houses are connected to one pole, then instead of using 10 household circuit breakers, I will use a single pole circuit breaker.

RadhaKrishna.arvapally@gmail.com

Backward compatibility – Cost optimization

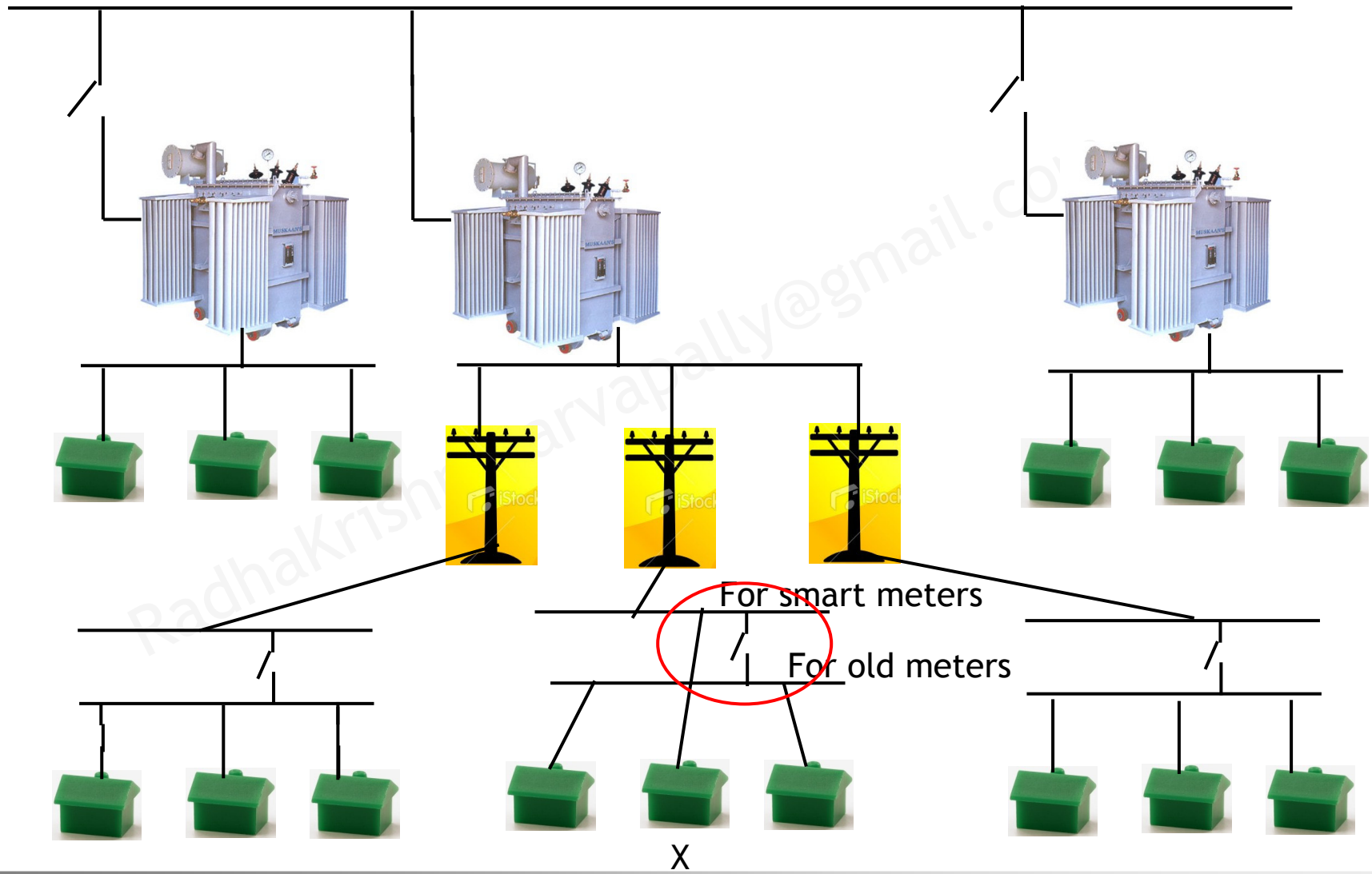

Optimization

Sending SMS to each SEM every time price changes is expensive. How to address this?

We can have data communication over power lines. But we miss an advantage of different tariff change for each customer type.

Eg: during peak hours, house hold tariff can become 1.5 times and commercial tariff can become 1.8 times.

SMS allows high flexibility per customer. Where as data communication over power lines gives less flexibility (like per customer type and not per customer)

Radhakrishna.arvapally@gmail.com

Birth of new products

Okay, now we introduced new products like house-SCB (smart circuit breaker), pole-SCB, distribution-transformer-SCB.

Let us discuss about other new problems with this proposal and give birth to other products ☺

RadhaKrishna.arvapally@gmail.com

Bill Problem

Now an apartment went for a smart meter instead of lift backup generator.

But How to cut some corridor lights during high tariff hours which changes dynamically?

So we need our smart energy meter help us. Because he is the only one who knows the current billing rate (if it is more 1.0 times of base price)

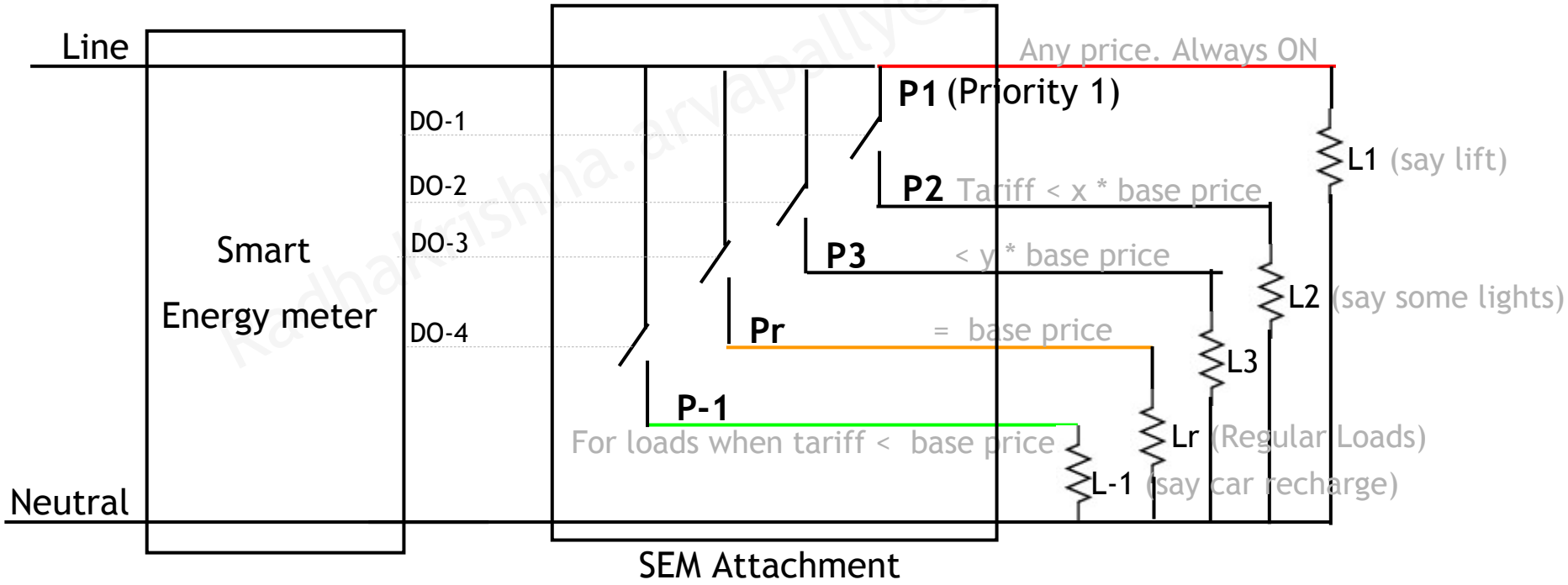

Radhakrishna.arvapally@gmail.com

Priorities of electric equipment

L1 (Load 1) are the items which we need to run all the time irrespective of billing rate (say lift of an apartment, pump in a fish tank)

L2 are the items if the billing rate is below x times of base price (say 1.5)

L3 are the items if the billing rate is below y times of the base price (say 1.25)

These thresholds are configurable by energy-consumer and not fixed.

Lr are the regular Loads which only work for base price. And we don't care for power cut.

L-1 are the items I want to run during cheaper price (below 0.9 times of base price), so A farmer can water his fields in mid night and I can recharge my electric car during mid night when the billing is only 0.7 times are base price. And that is automatic, I don't really need to worry about tracking high/low price times …

Okay, we introduced a new concept of cheaper electricity. This is the time when the demand is much lower than supply. Now distribution companies can give discounts. (like a broadband connection).

RadhaKrishna.arvapally@gmail.com

Discourage higher usage

In India, as on today, distribution companies uses telescoping billing.

This makes low energy users billed at lesser tariff.

How do we implement that along with time based billing?

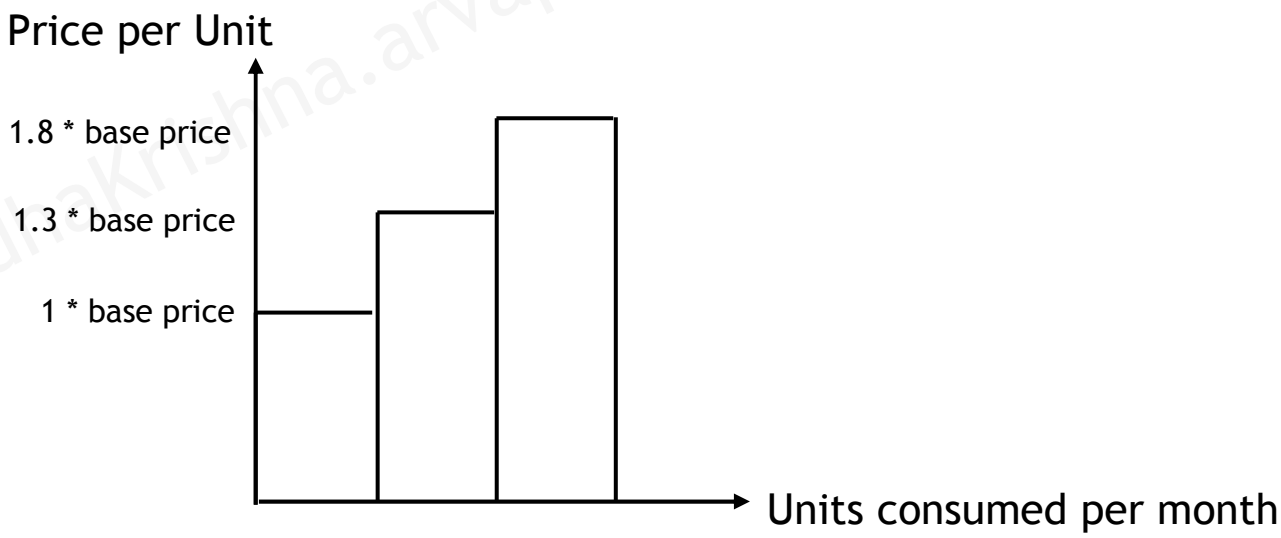

Radhakrishna.arvapally@gmail.com

New billing

Calculate the additional bill the user have to pay for extra usage than base price tariff limit. Add this to time-based calculated bill.

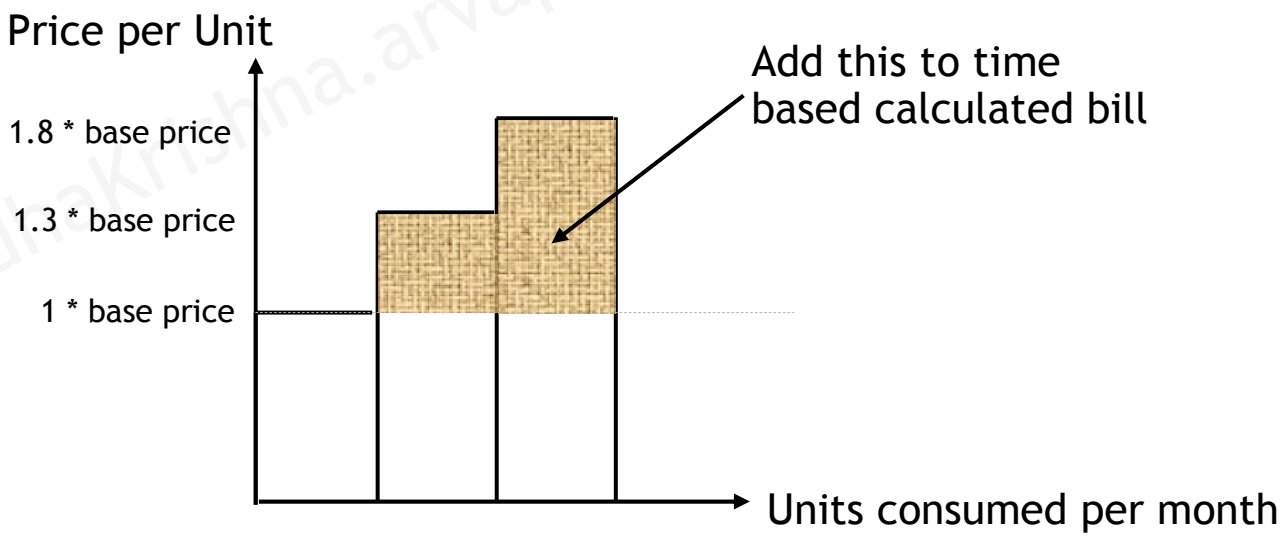

Radhakrishna.arvapally@gmail.com

New Applications of SEM

As we have a communication channel from central monitoring station, we can use this channel for information sharing with energy consumers.

- Planned outage for maintenance
- Bill amount and Due date

RadhaKrishna.arvapally@gmail.com

High level view

High level view is given below

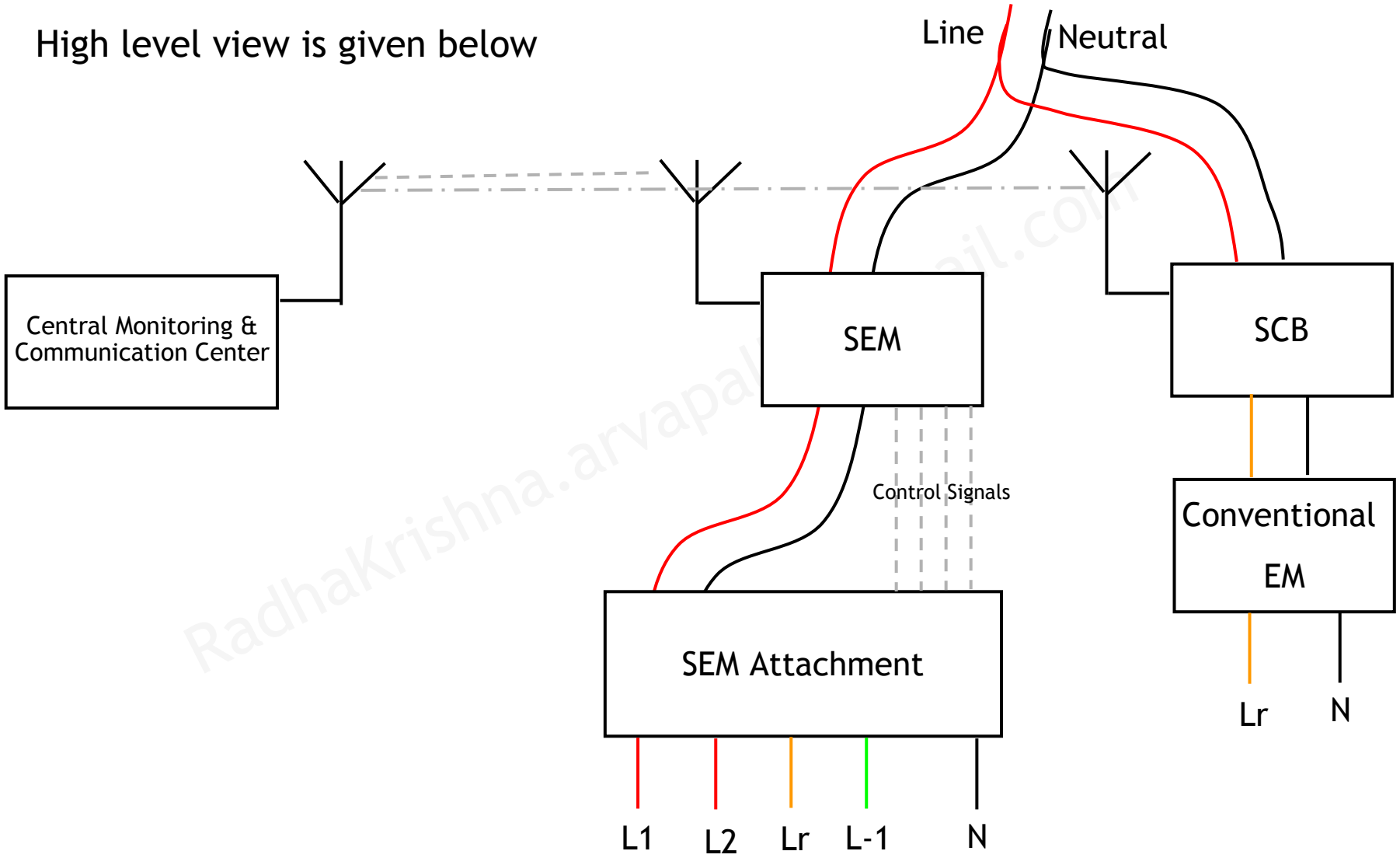

RadhaKrishna.arvapally@gmail.com

High level block diagram of SEM

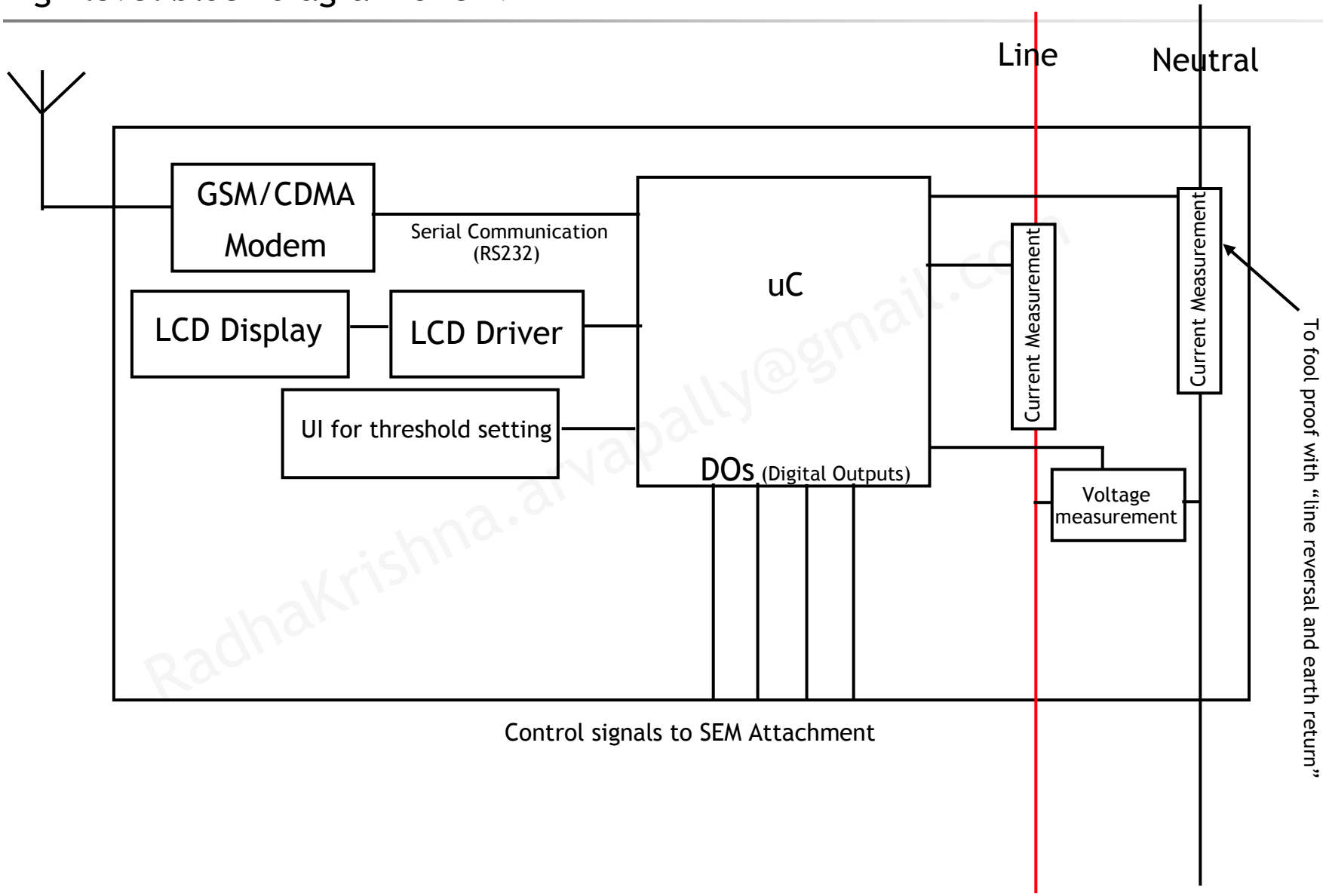

RadhaKrishna.arvapally@gmail.com

High level block diagram of SCB

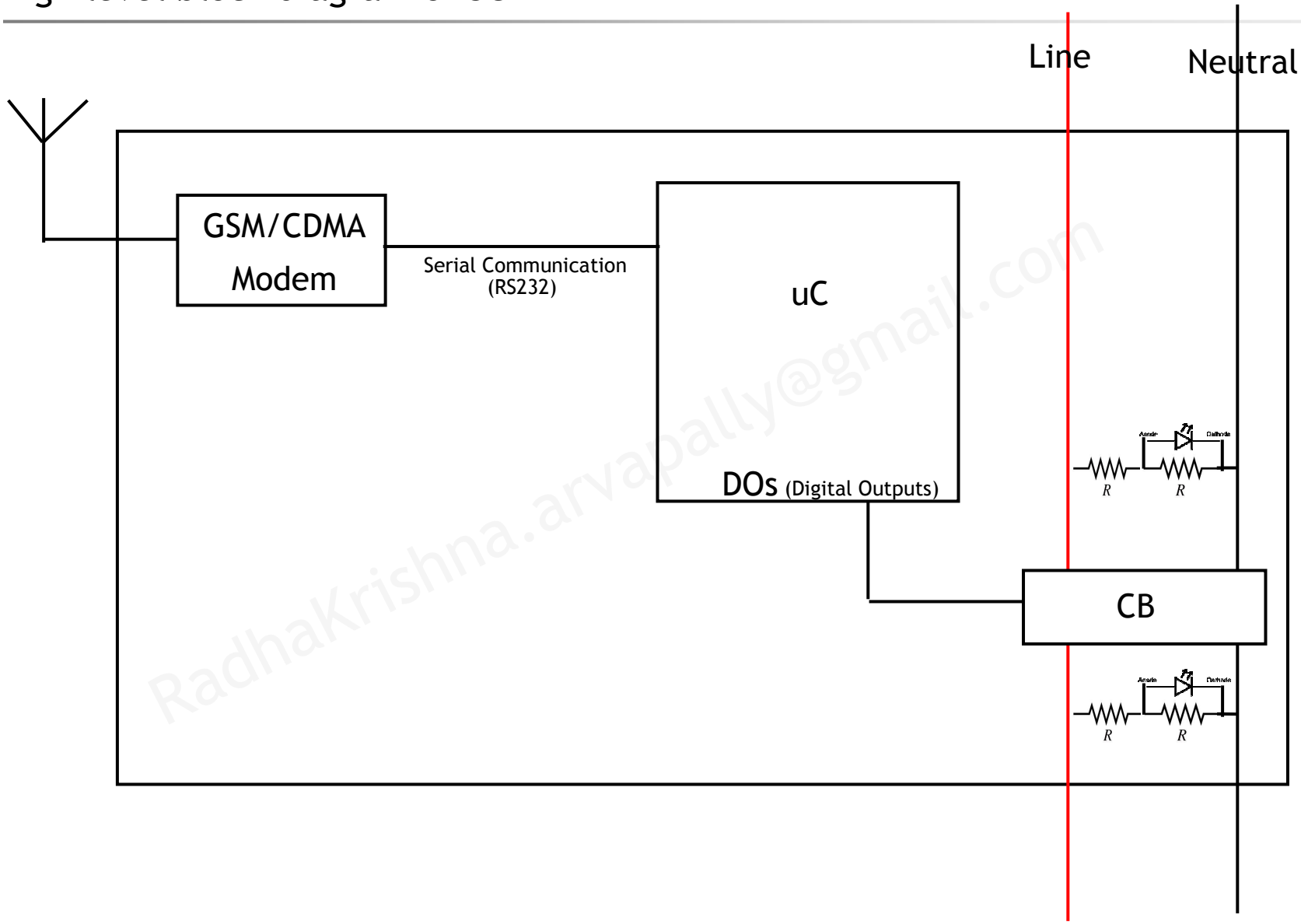

RadhaKrishna.arvapally@gmail.com

Market

How much market does this SEM, SCB business does have?

Indian population 110 crores. If we consider 4 people per house, 27.5 crore houses.

+ Industries + corporates + commercials + malls + …

world market (as per http://www.census.gov/main/www/popclock.html world population is 6.8 billion as on today. so approx houses = 1.7 billion houses)

RadhaKrishna.arvapally@gmail.com

FAQ

Q: Why does power distribution company interested in this?

A: He is able to sell the power in peak hours for higher price.

Q: why a consumer would be interested?

A: He can get power for his mobile charging (☺).

Q: why would I need to pay more for the peaks that others are creating?

A: Connect all your load to P_r, so your regular power cut is simulated. You will not have power in peak hours (as earlier), you don't need to pay more.

Q: I don't want to pay more in peak hours. I am happy with power cut. What makes me go for this SEM?

A: In mid night, if the price is below base price (say 0.8 times of your base price), you can save power by running energy intensive equipment like washing machine, dish washer, electric vehicle charging, invertor charging.

Radhakrishna.arvapally@gmail.com

FAQ contd…

Q: what if the spike (peak) shifts to other time.

A: it is upto central monitoring station to analyze the statistics it is collecting and dynamically change tariff and send to all SME.

Eg: If the tariff is 1.5 times for 8AM-9AM today, it can change to 1.8 times 8:30-10:00 tomorrow. Decision is taken by central monitoring station monitoring daily stats. That algorithm is not covered in this doc. Seasonal usage also drives usage, which drives stats, which drives price, which drives usage ;)

Q: How to educate people on this SME?

A: we don’t need to educate people to go for SME. If they don’t want power cut, they will apply for SME with distribution company. This is how the people got to know about inverters and generators.

Radhakrishna.arvapally@gmail.com

FAQ contd…

Q: How to make people understand L1, L2, L3 loads…

A: Today, who ever wants inverter, they don't connect all their loads to inverter. They are selective. On similar grounds, people will be selective on what to connect on L1 connection, what on L2 and L3.

Q: what if the average usage increase.

A: This solution is only for the f(t) problem. This does not address for the total consumption increase. Generation companies need to increase generation.

Q: what if some people in one power-cut zone wants SME for the additional cost involved, and others are not?

A: SMEs will be installed only for those who want "no power cut". Others will still have power cut.

Radhakrishna.arvapally@gmail.com

FAQ contd…

Q: Is power cut that big problem to address?

A: Yes.

http://www.expresscomputeronline.com/20021111/newsan1.shtml

http://www.fibre2fashion.com/news/fabrics-news/newsdetails.aspx?news_id=63592

Q: Do we really have market? I did not see houses with inverter.

A: You must be living in some metro city. Houses in towns and villages use Inverters due to higher rate of power cut. Every shop in town will have a diesel generator.

http://www.olivetelecom.in/mobile-phone/V-G2300-AAA-battery-mobile/

Q: How to recognize the Demand & supply gap?

A: If the demand is more than supply, frequency drops (say less than 49.5Hz). If the demand is less, frequency increases (say more than 50.5Hz)

Radhakrishna.arvapally@gmail.com

FAQ contd…

Q: What other advantages this SEM/SCB brings me?

A: Turning ON Power after a power cut period puts sudden load on line. We can control to turn ON each SCB one after other (say turning the whole load over a 5 sec interval instead of a few micro-seconds

Q: List a few companies who will have impact?

A:

- http://www.microtekdirect.com
- http://www.apc.com/
- http://kirloskarapps.kirloskar.com/kirloskar/ProductIndexPageCategorywise.jsp?CategoryCode=215&offset=20
- http://www.dieselgenerator.in/
- http://dg-newline.en.made-in-china.com/product/beqmGEDruLkx/China-Prime-1000KVA-Diesel-Generator-Powered-by-Cummins-Stamford-NL880C-.html

Radhakrishna.arvapally@gmail.com

Utility (power distribution) companies world wide

- http://www.xcelenergy.com
- http://www.ndpl.com/

RadhaKrishna.arvapally@gmail.com

Energy Meter Manufacturing companies world wide

- http://www.blackmersmartenergy.com
- http://www.silabs.com/applications/industrial/Pages/SmartMeters.aspx
- http://www.greenplug.us/
- http://www.iwantmygreenplug.com
- http://www.securetogether.com/
- http://www.lntebg.com
- http://www.arrowasia.com.hk/
- http://www.mnenergysmart.com

RadhaKrishna.arvapally@gmail.com

Invertor/Generator/… (Potential Losers by smart grids) world wide

- http://www.su-kam.com/
- http://www.apc.com/IN/
- http://www.luminousups.com/
- http://www.kirloskar.com
- http://www.dieselgenerator.in/

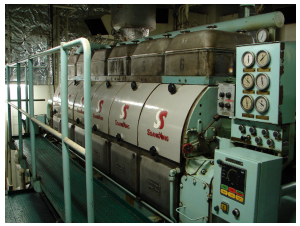

RadhaKrishna.arvapally@gmail.com

Bibliography

- http://en.wikipedia.org/wiki/Relative_cost_of_electricity_generated_by_different_sources
- http://www.dieselserviceandsupply.com/Sizing_A_Generator.aspx
- http://en.wikipedia.org/wiki/Smart_meter
- http://en.wikipedia.org/wiki/Smart_grid
- http://www.smartgridreality.com/
- http://www.embedded.com/225200108?cid=NL_embedded
- http://www.bluetooth.com/English/Products/Pages/Going-Green-Bluetooth-Technology.aspx
- http://www.silabs.com/applications/industrial/Pages/SmartMeters.aspx
- http://www.eetimes.com/design/embedded/4209515/Robust-design-principles-for-home-smart-grid-metering?cid=NL_Embedded&Ecosystem=embedded
- http://www.eetimes.com/design/smart-energy-design
- http://www.eetimes.com/electronics-blogs/power-management-designline-blog/4035739/Smart-meters--the-next-political-sideshow-?cid=NL_Embedded
- http://www.eetimes.com/electronics-news/4198537/Email-Will-the-Smart-Grid-be-worth-the-costs-?cid=NL_Embedded
- http://www.eetimes.com/design/embedded-internet-design/4019095/RF-meets-power-lines-designing-intelligent-smart-grid-systems-that-promote-energy-efficiency?cid=NL_Embedded&Ecosystem=embedded
- http://www.eetimes.com/design/power-management-design/4008897/Getting-basic-utility-meter-designs-ready-for-the-Smart-Grid?cid=NL_Embedded&Ecosystem=embedded
- http://www.eetimes.com/design/power-management-design/4013588/Smart-Metering-Technology-Promotes-Energy-Efficiency-for-a-Greener-World?cid=NL_Embedded&Ecosystem=embedded
- http://www.eetimes.com/electronics-news/4084945/Engineers-plug-into-draft-smart-grid-specs?cid=NL_Embedded

Radhakrishna.arvapally@gmail.com

Bibliography Contd …

- http://www.eetimes.com/electronics-news/4085350/Plug-and-play-forum-launches-smart-grid-group?cid=NL_Embedded
- http://www.eetimes.com/electronics-news/4087095/IEEE-creates-Web-portal-on-smart-grids?cid=NL_Embedded
- http://www.eetimes.com/electronics-news/4085904/Video-Duke-Energy-CTO-calls-for-open-smart-grids?cid=NL_Embedded
- http://www.eetimes.com/electronics-news/4088166/Smart-grid-group-reaches-out-to-consumers?cid=NL_Embedded
- http://www.eetimes.com/electronics-news/4204800/Meeting-global-smart-grid-groups?cid=NL_Embedded
- http://www.eetimes.com/electronics-news/4084451/Group-bids-to-spend-178M-on-smart-grids?cid=NL_Embedded
- http://www.eetimes.com/electronics-news/4084939/Wanted-Power-engineers-for-smart-grids?cid=NL_Embedded
- http://www.eetimes.com/electronics-products/electronic-product-reviews/rf-microwave-products/4199292/f0d1b96d-c3b0-4b70-a422-1a79e30c6f2a?cid=NL_Embedded
- http://www.eetimes.com/electrical-engineers/education-training/webinars/4209498/Issues-and-Best-Practices-for-successful-Smart-Grid-Transformation?cid=NL_Embedded
- http://www.eetimes.com/electrical-engineers/education-training/tech-papers/4209322/Architecting-New-Age-Smart-Utility-Meters?cid=NL_Embedded
- http://www.eetimes.com/electrical-engineers/education-training/tech-papers/4132245/Smart-Metering?cid=NL_Embedded
- http://www.eetimes.com/electrical-engineers/education-training/tech-papers/4129260/Reducing-Household-Energy-use-through-Innovative-ARM-Powered-Smart-Meters?cid=NL_Embedded
- http://www.eetimes.com/electrical-engineers/education-training/tech-papers/4208936/Smart-Grid-and-Metering?cid=NL_Embedded
- http://www.eetimes.com/electrical-engineers/education-training/tech-papers/4209390/Securing-Smart-Grid-Devices?cid=NL_Embedded

Bibliography Contd …

- http://innovationobservatory.com/reports/latesttitles?q=reports/smartgrids
- http://www.gridweek.com/2010/
- http://www.gridweek.com/2010/#track_428
- http://www.arcweb.com/Domains/SmartGrid/default.aspx?gclid=COzt9JTr3qQCFcWQ3wodAzO2LQ

RadhaKrishna.arvapally@gmail.com